## A
board drillings

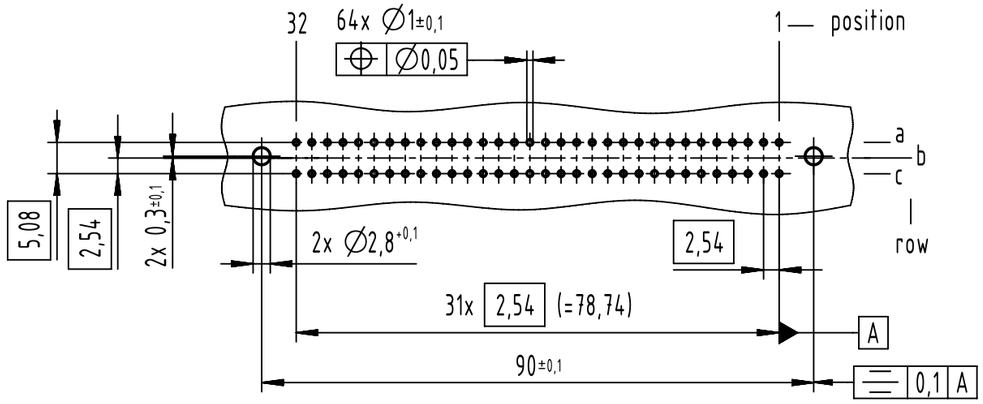


## A
contact arrangement

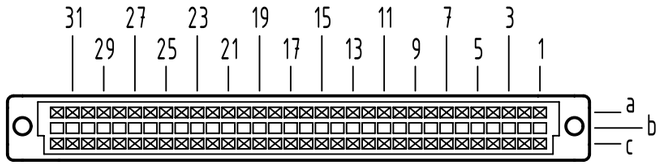


64 solder contacts

⊠ = position with contact

□ = position without contact

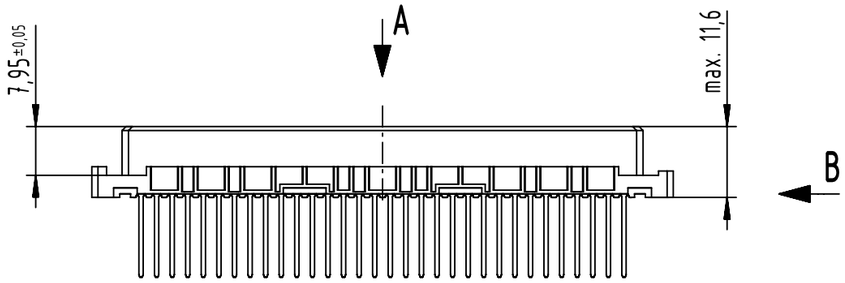


## B (2:1)

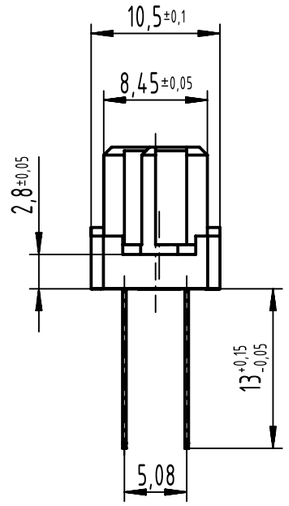


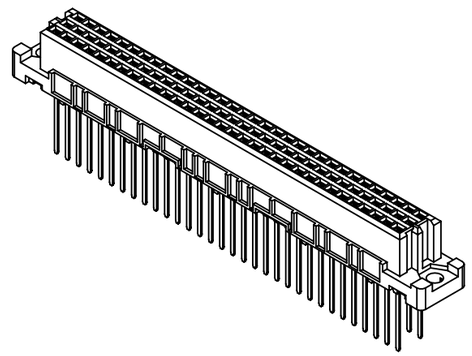

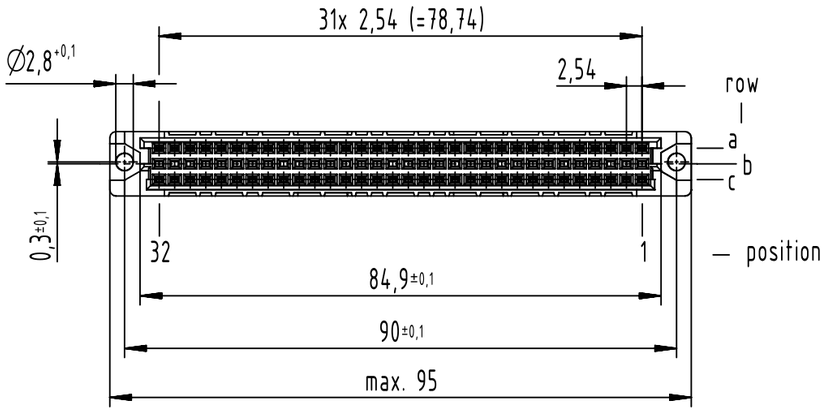


| | |
|---|---|
| 09 03 264 6421 | 2 |
| part no. | performance level |

further information see product data sheet

| | | | | | |
|---|---|---|---|---|---|
| All Dimensions in mm<br>Original Size DIN A3 | Scale<br>1:1 | Free size tol.<br>IEC 60603-2 | | Ref.<br>Sub. | |
| All rights reserved<br>Department EL PD | Created by<br>STORCK | Inspected by<br>LEHNERT | Standardisation<br>302077 | Date<br>2021-03-23 | State<br>Final Release |
| HARTING<br>D-32339 Espelkamp | Title<br>DIN Signal type C female solder 13.0 64-pole | | | | Doc-Key / ECM-Nr.<br>100173852/UGD/249/G<br>500000191082 |
| | Type<br>TB | Number<br>0903264X421 | | Rev.<br>G | Page<br>1/1 |

A3